Introduction to Digital Systems

Part III (Sequential Components)

2025/2026

Design (Synthesis) of Clocked Synchronous Finite State Machines

Arnaldo Oliveira, Augusto Silva, Iouliia Skliarova, Adão Silva

Lecture Contents

- FSM design (synthesis) steps
- Modeling formalisms
  - State Diagrams
  - State Tables
- Ilustrative examples
  - Up/down counter with Mealy output flags
  - Moore sequence detector FSM
- Initialization (reset)
- Unused state encodings
- One-hot state encoding

Some figures and content extracted from: John F. Wakerly, "Digital Design – Principles and Practices", 4 ed., Pearson – Prentice Hall, 2006 (chapter 7). Reading chapter 7 (4th ed.) or chapter 9 (5th ed.) is highly recommended.

Introduction

- What is digital system synthesis (in general)?
- What is FSM synthesis?
  - Design steps
- Initial specification in natural language, timing diagrams, etc.
- Modelling formalisms that will be used to translate the initial specification
  - State Diagrams
  - State Tables
- Let's discuss the synthesis flow based on examples…

Design Steps

1) Construct a State Diagram and the state/output table corresponding to the word description or specification, using mnemonic names for states -> State/output tables

2) Minimize the number of states in the sate/output table -> state minimization

3) Choose a set of sates variables and assign state-variable combinations to the named states -> state assignment

- Step 1 is when designer “really designs”
- Experienced designers typically skip step 2
- Remaining steps done following a well-defined synthesis procedure

Design Steps

4) Substitute the sate-variable combinations into the state/output table to create a transition/output table that shows the desired next state-variable combination and output for each state/output combination -> Transition/output table

5) Choose a flip-flop type for the state memory. It is almost always an edge-triggered D FF, and that´s a good choice.

6) Construct an excitation table that shows the excitation values required to obtain the desired next state for each state/input combination -> Excitation table

7) Derive excitation equations from the excitation table -> Excitation equations

8) Derive output equations from the transition/output table -> Output equations

9) Draw a logic diagram that shows the state-variable storage elements and realizes the required excitation and output equations -> Logic diagram

- Steps 4, 6-9 are the most tedious, but typically automated by a compiler/synthesis tool
- Designer must know the procedure to understand / have a critical thinking of the results

Synthesis Example 1 – Specification

- Whenever “Up” button is pressed, volume must be incremented at the clock tick
- Whenever “Down” button is pressed, volume must be decremented at the clock tick
- To simplify (decrease complexity) assume volume has only 4 levels (possible values)
- “Max” output must be activated if volume is already at maximum level and “Up” is pressed
- “Min” output must be activated if volume is already at minimum and “Down” is pressed
- Current volume level must also be provided at the output of the circuit

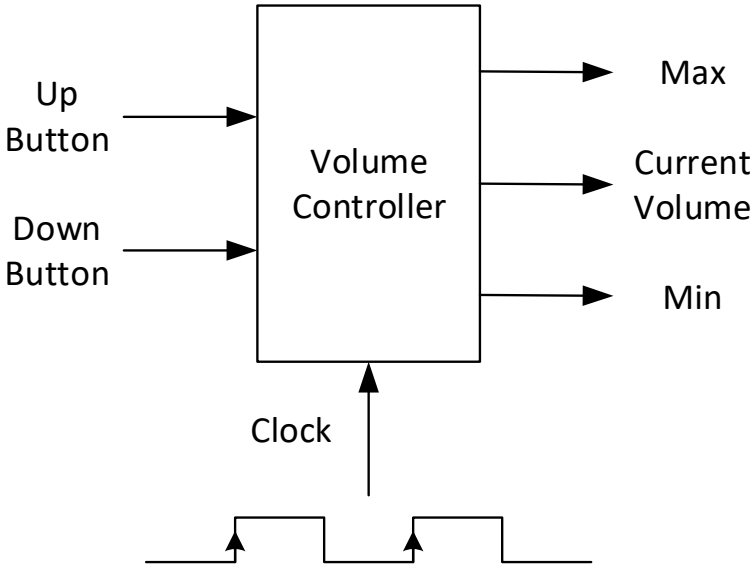

State Diagram

Mealy machine! Why?

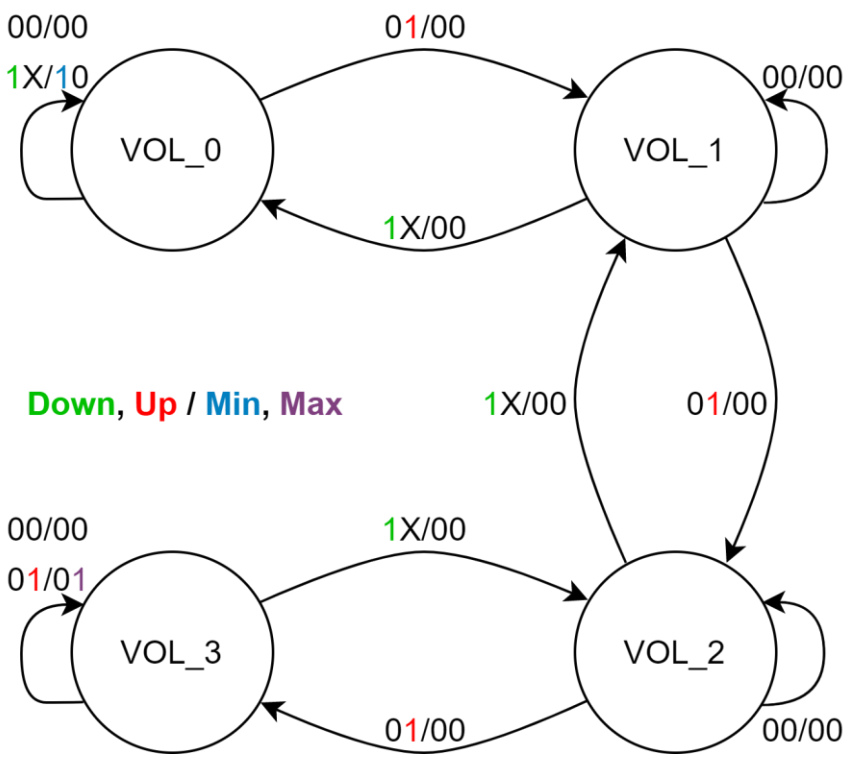

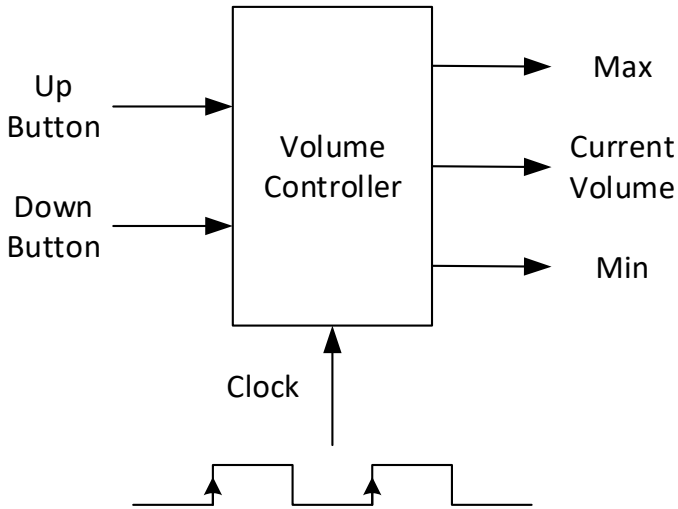

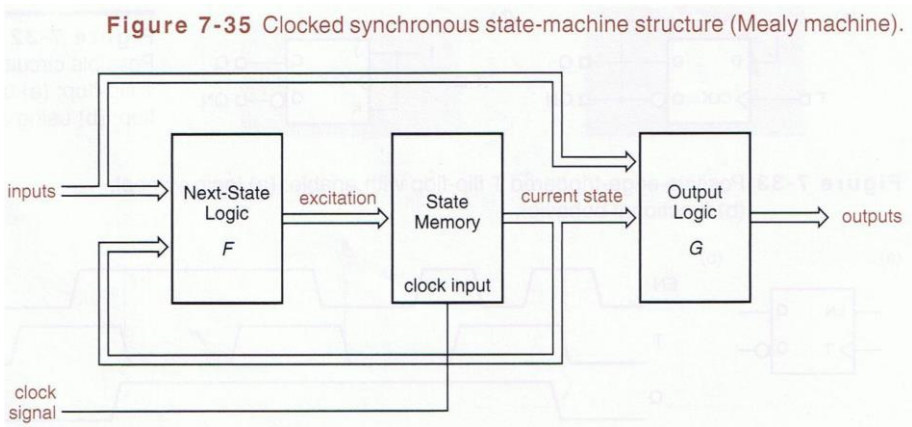

State, Transition/Outputs and Excitation Tables

State / Outputs Table

Down (Dw), Up (Up)

Current State		00		01		11		10	
Meaning	S	S*	Min, Max	S*	Min, Max	S*	Min, Max	S*	Min, Max
Min vol.	Vol_00	Vol_00	00	Vol_01	00	Vol_00	10	Vol_00	10
	Vol_01	Vol_01	00	Vol_02	00	Vol_00	00	Vol_00	00
	Vol_02	Vol_02	00	Vol_03	00	Vol_01	00	Vol_01	00
Max vol.	Vol_03	Vol_03	00	Vol_03	01	Vol_02	00	Vol_02	00

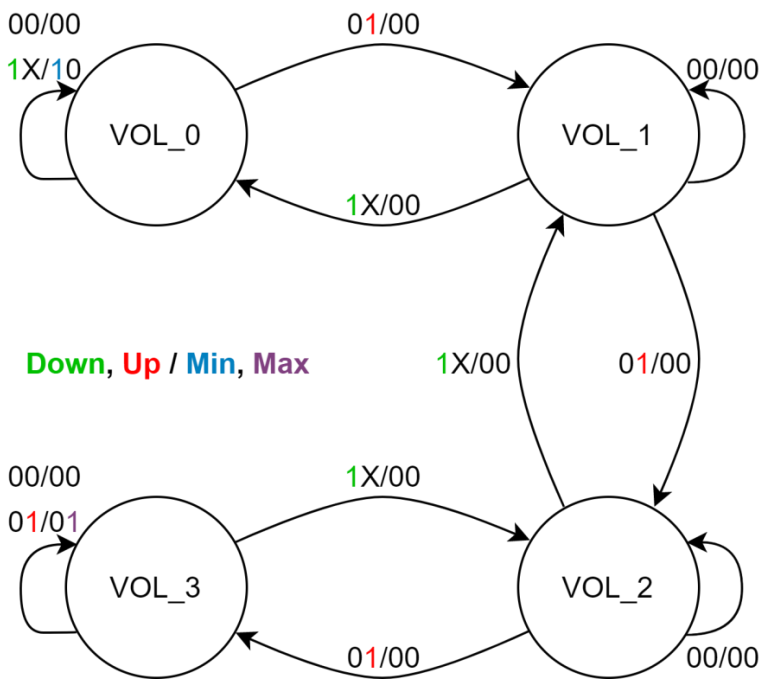

State, Transition/Outputs and Excitation Tables

State / Outputs Table

Down (Dw), Up (Up)

Current State		00		01		11		10	
Meaning	S	S*	Min, Max	S*	Min, Max	S*	Min, Max	S*	Min, Max
Min vol.	Vol_00	Vol_00	00	Vol_01	00	Vol_00	10	Vol_00	10
	Vol_01	Vol_01	00	Vol_02	00	Vol_00	00	Vol_00	00
	Vol_02	Vol_02	00	Vol_03	00	Vol_01	00	Vol_01	00
Max vol.	Vol_03	Vol_03	00	Vol_03	01	Vol_02	00	Vol_02	00

Binary State Encoding		
Meaning	S	Q1 Q0
Min vol.	Vol_00	00
	Vol_01	01
	Vol_02	10
Max vol.	Vol_03	11

Transition / Outputs Table

Down (Dw), Up (Up)

Current State		00		01		11		10	
Meaning	Q1 Q0	Q1* Q0*	Min, Max	Q1* Q0*	Min, Max	Q1* Q0*	Min, Max	Q1* Q0*	Min, Max
Min vol.	00	00	00	01	00	00	10	00	10
	01	01	00	10	00	00	00	00	00
	10	10	00	11	00	01	00	01	00
Max vol.	11	11	00	11	01	10	00	10	00

Excitation / Outputs Table

Down (Dw), Up (Up)

Current State		00		01		11		10	
Meaning	Q1 Q0	D1 D0	Min, Max	D1 D0	Min, Max	D1 D0	Min, Max	D1 D0	Min, Max
Min vol.	00	00	00	01	00	00	10	00	10
	01	01	00	10	00	00	00	00	00
	10	10	00	11	00	01	00	01	00
Max vol.	11	11	00	11	01	10	00	10	00

Using D flip-flops
Q*=D

Minimization of Excitation/Outputs

Excitation / Outputs Table

Down (Dw), Up (Up)

Current State		00		01		11		10	
Meaning	**Q1 Q0**	**D1 D0**	**Min, Max**	**D1 D0**	**Min, Max**	**D1 D0**	**Min, Max**	**D1 D0**	**Min, Max**
Min vol.	**00**	**00**	00	**01**	00	**00**	10	**00**	10
	01	**01**	00	**10**	00	**00**	00	**00**	00
	10	**10**	00	**11**	00	**01**	00	**01**	00
Max vol.	**11**	**11**	00	**11**	01	**10**	00	**10**	00

D0

Q1 \ Q0	00	01	11	10
00		1		
01	1			
11	1	1		
10		1	1	1

Dw

Up

D1

Q1 \ Q0	00	01	11	10
00				
01		1		
11	1	1	1	1
10	1	1		

Dw

Up

Excitation

$$D_0 = Q_0.\overline{Dw}.\overline{Up} + \overline{Q_0}.\overline{Dw}.Up + Q_1.Q_0.\overline{Dw} + Q_1.\overline{Q_0}.Dw$$

$$D_1 = Q_1.Q_0 + Q_1.\overline{Dw} + Q_0.\overline{Dw}.Up$$

Outputs

$$Min = \overline{Q_1}.\overline{Q_0}.Dw \qquad Max = Q_1.Q_0.\overline{Dw}.Up$$

Initialization (Reset)

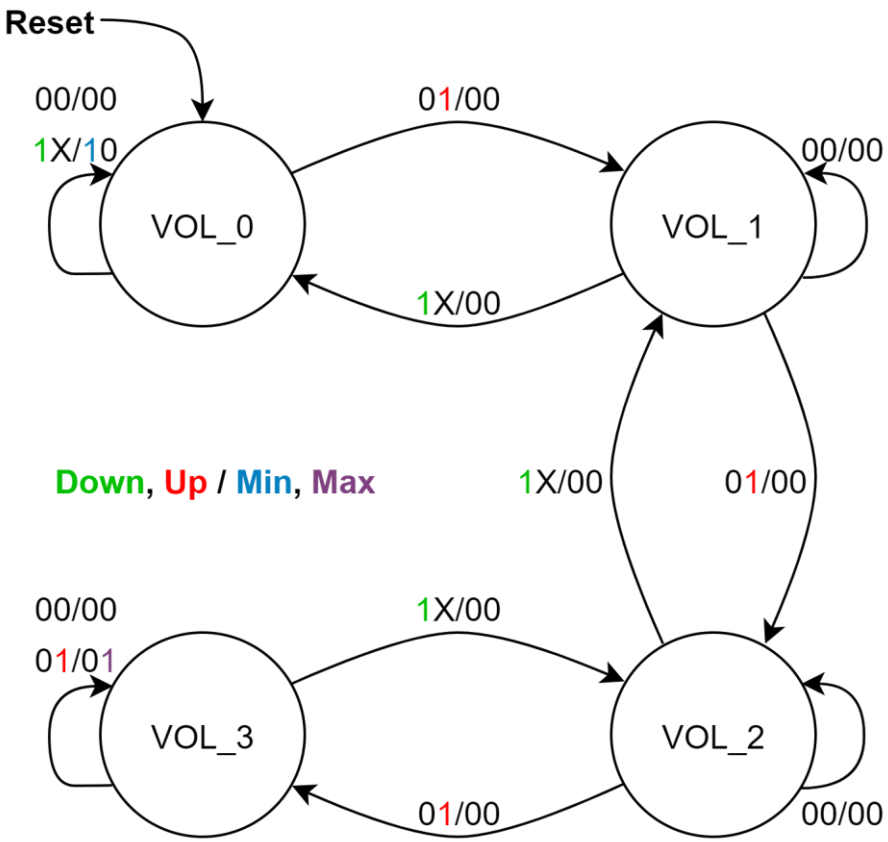

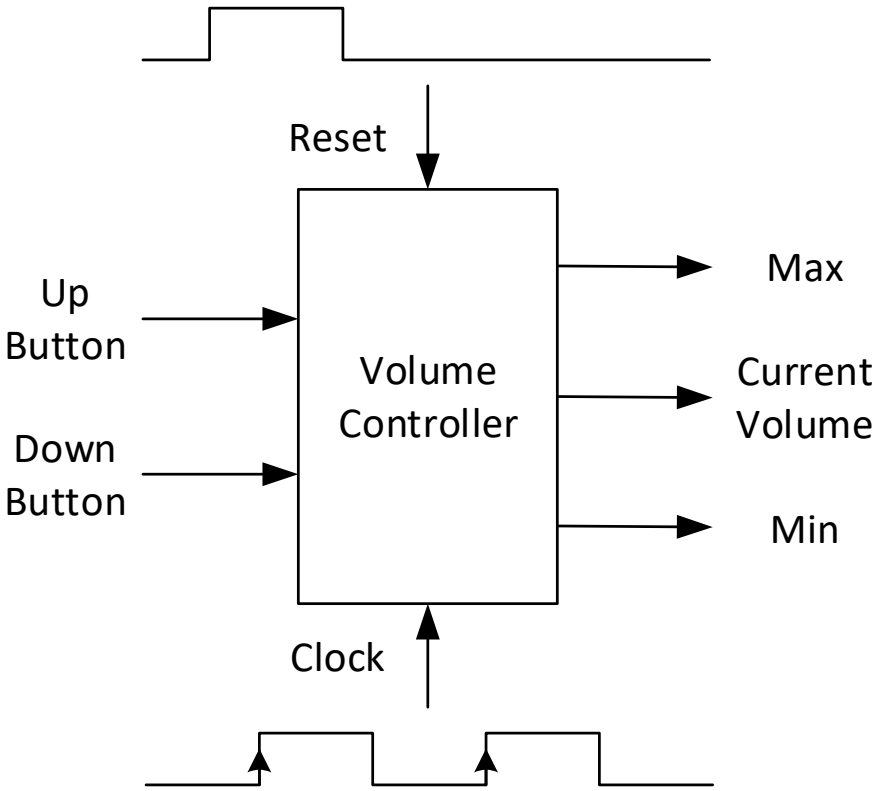

Positive-edge-triggered D Flip-flop with Synchronous Clear (Reset)

- Positive-edge-triggered D Flip-flop with “gated” data input

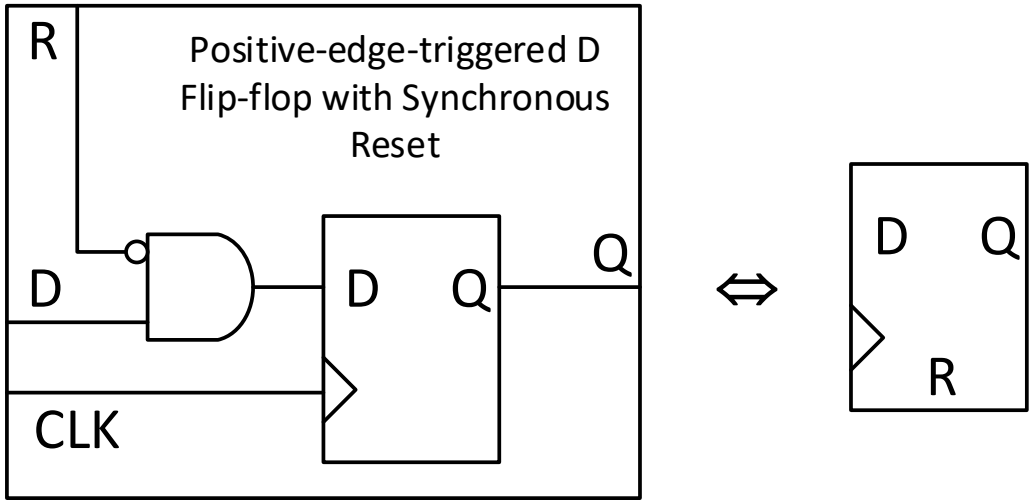

- How to add an enable input?

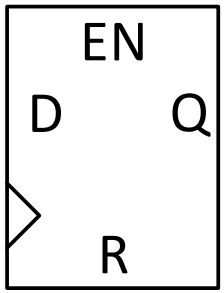

Simplified Logic Diagram

$$D_0 = Q_0.\overline{Dw}.\overline{Up} + \overline{Q_0}.\overline{Dw}.Up + Q_1.Q_0.\overline{Dw} + Q_1.\overline{Q_0}.Dw$$

$$D_1 = Q_1.Q_0 + Q_1.\overline{Dw} + Q_0.\overline{Dw}.Up$$

$$Max = Q_1.Q_0.\overline{Dw}.Up$$

$$Min = \overline{Q_1}.\overline{Q_0}.Dw$$

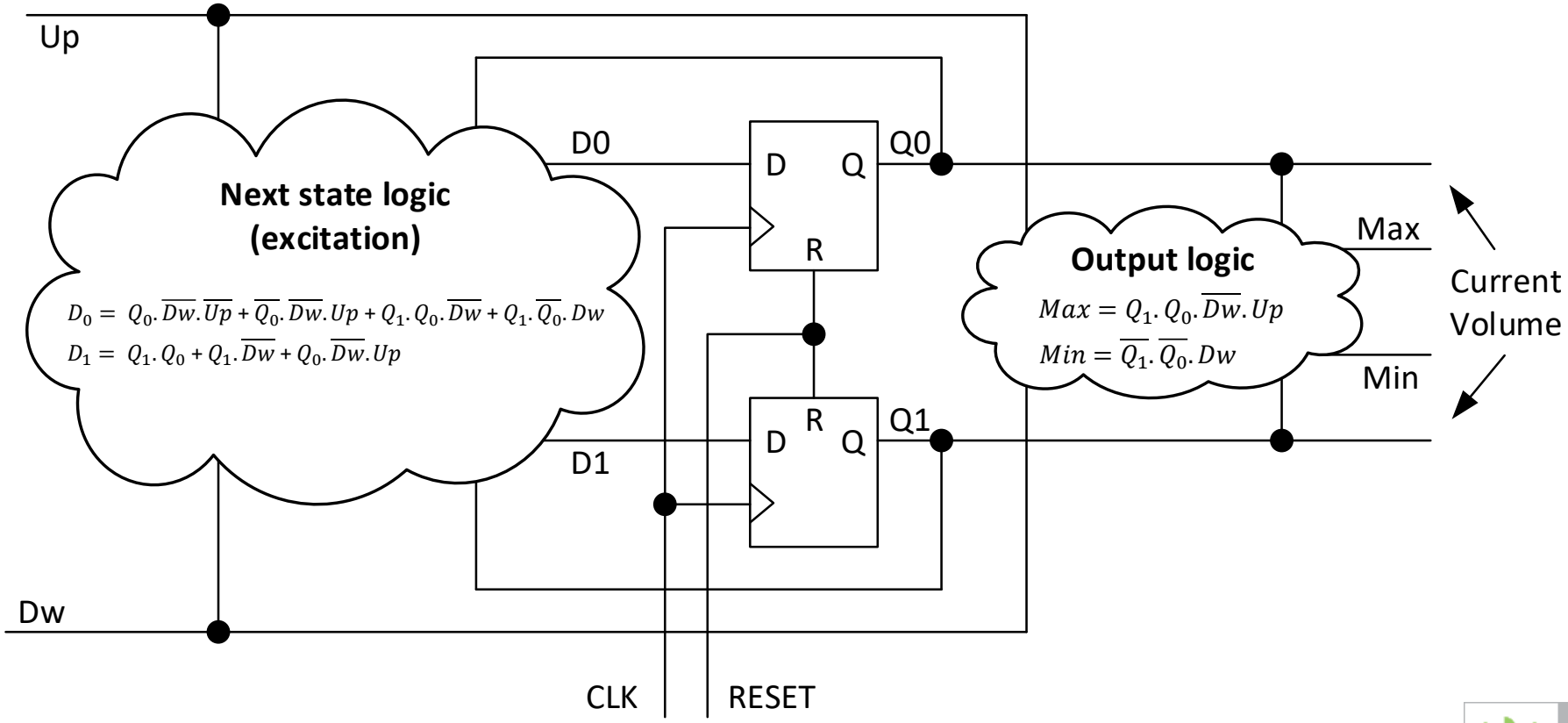

Gray State Encoding

Excitation / Outputs Table

Down (Dw), Up (Up)

Current State		00		01		11		10	
Meaning	Q1 Q0	D1 D0	Min, Max	D1 D0	Min, Max	D1 D0	Min, Max	D1 D0	Min, Max
Min vol.	00	00	00	01	00	00	10	00	10
	01	01	00	11	00	00	00	00	00
	11	11	00	10	00	01	00	01	00
Max vol.	10	10	00	10	01	11	00	11	00

D0

Q1 \ Q0 \ Dw	00	01	11	10
00		1		
01	1	1		
11	1		1	1
10			1	1

Up

D1

Q1 \ Q0 \ Dw	00	01	11	10
00				
01		1		
11	1	1		
10	1	1	1	1

Up

Gray State Encoding		
Meaning	S	Q1 Q0
Min vol.	Vol_min	00
	Vol_low	01
	Vol_med	11
Max vol.	Vol_max	10

Excitation

$$D_0 = Q_0.\overline{Dw}.\overline{Up} + \overline{Q_1}.\overline{Dw}.Up + Q_1.Dw$$

$$D_1 = Q_1.\overline{Dw} + Q_1.\overline{Q_0} + Q_0.\overline{Dw}.Up$$

Outputs

$$Min = \overline{Q_1}.\overline{Q_0}.Dw \qquad Max = Q_1.\overline{Q_0}.\overline{Dw}.Up$$

Synthesis Example 2 – Specification

- Design a detector that activates the output (Yout) whenever the 1001 sequence is detected at the input (Xin)
- Input bits are sampled at clock tick rate
- Support overlapped sequences
- Output depends on the previous 4 input bits

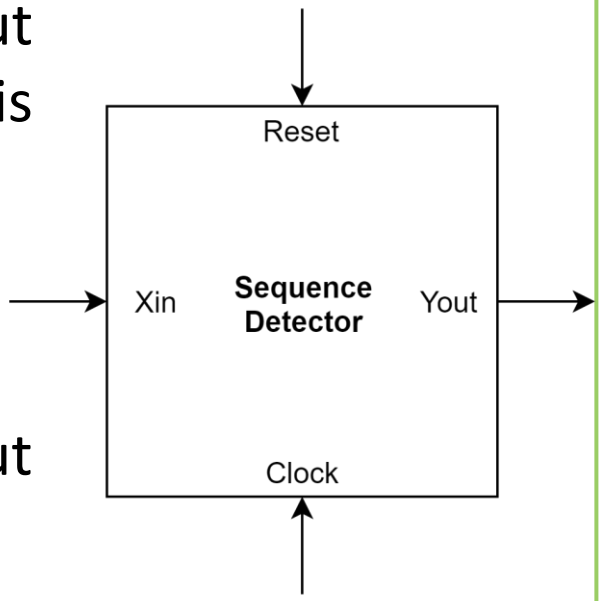

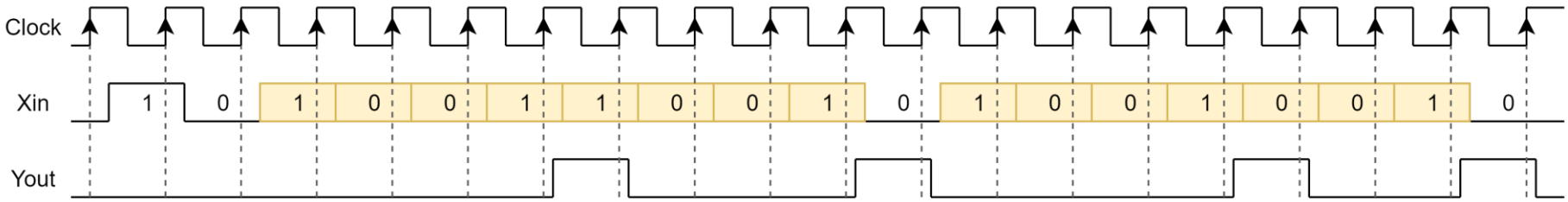

State Diagram

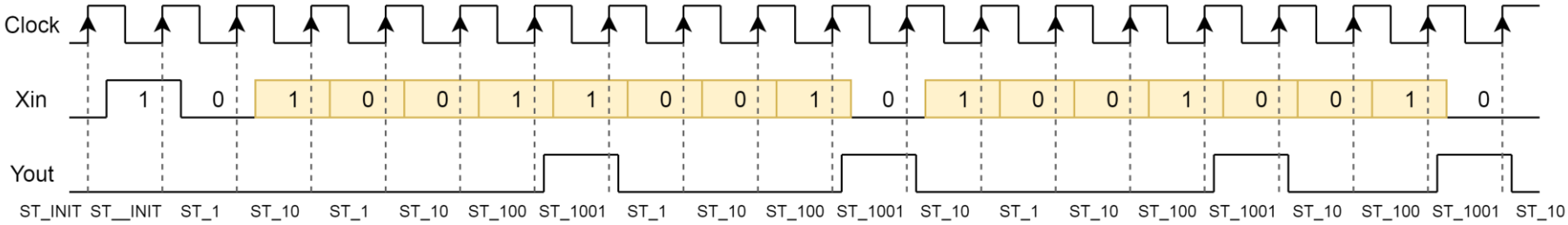

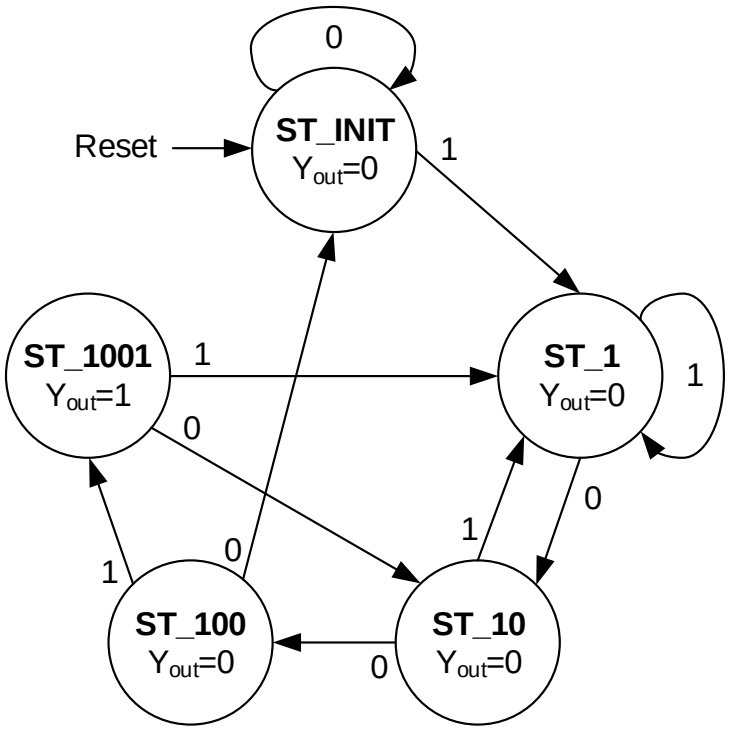

Moore machine! Why?

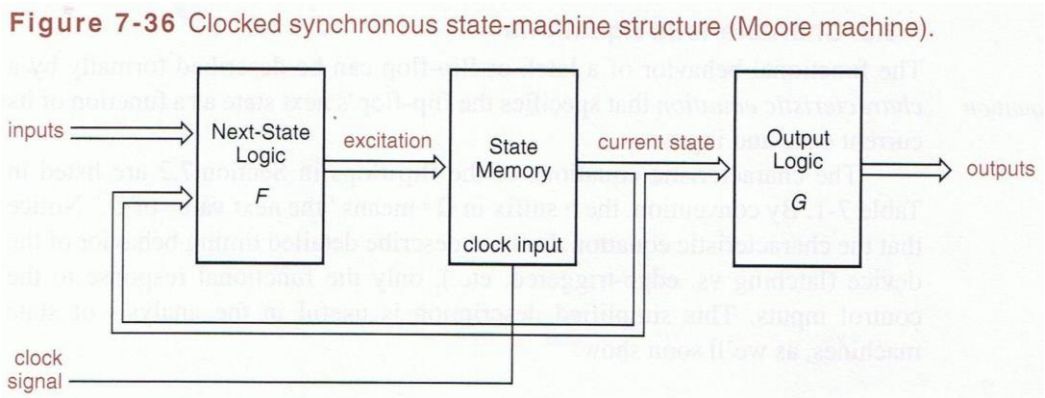

State, Transition/Output and Excitation Tables

State / Output Table

Current State	Xin		Yout
	0	1	
S	S*		
ST_INIT	ST_INIT	ST_1	0
ST_1	ST_10	ST_1	0
ST_10	ST_100	ST_1	0
ST_100	ST_INIT	ST_1001	0
ST_1001	ST_10	ST_1	1

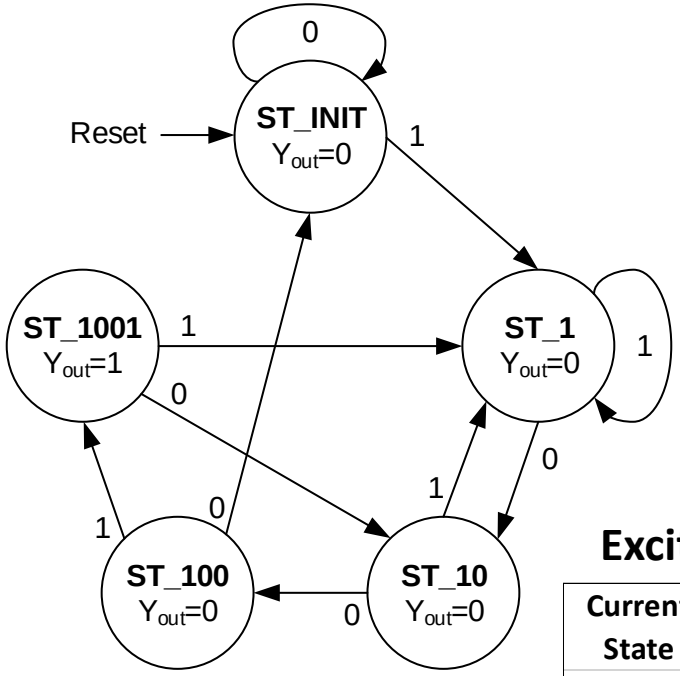

State Encoding	
S	Q2 Q1 Q0
ST_INIT	000
ST_1	001
ST_10	011
ST_100	010
ST_1001	100

Transition / Output Table

Current State	Xin		Yout
	0	1	
Q2 Q1 Q0	Q2* Q1* Q0*		
000	000	001	0
001	011	001	0
011	010	001	0
010	000	100	0
100	011	001	1

Using D flip-flops
Q*=D

Excitation / Output Table

Current State	Xin		Yout
	0	1	
Q2 Q1 Q0	D2 D1 D0		
000	000	001	0
001	011	001	0
011	010	001	0
010	000	100	0
100	011	001	1

Minimization of Excitation/Output

Excitation / Output Table

Current State	Xin		Yout
	0	1	
Q2 Q1 Q0	D2 D1 D0		
000	000	001	0
001	011	001	0
011	010	001	0
010	000	100	0
100	011	001	1

D0

Q2 \ Q1 \ Q0	00	01	11	10
00		1	1	1
01			1	
11				
10	1	1		

Xin

Excitation

$$D_0 = \overline{Q_2}.\overline{Q_1}.X_{in} + \overline{Q_2}.\overline{Q_1}.Q_0 + \overline{Q_2}.Q_0.X_{in} + Q_2.\overline{Q_1}.\overline{Q_0}$$

D1

Q2 \ Q1 \ Q0	00	01	11	10
00				1
01				1
11				
10	1			

Xin

$$D_1 = \overline{Q_2}.Q_0.\overline{X_{in}} + Q_2.\overline{Q_1}.\overline{Q_0}.\overline{X_{in}}$$

D2

Q2 \ Q1 \ Q0	00	01	11	10
00				
01		1		
11				
10				

Xin

$$D_2 = \overline{Q_2}.Q_1.\overline{Q_0}.X_{in}$$

Output

$$Y_{out} = Q_2.\overline{Q_1}.\overline{Q_0}$$

Logic Diagram

$$D_0 = \overline{Q_2}.\overline{Q_1}.X_{in} + \overline{Q_2}.\overline{Q_1}.Q_0 + \overline{Q_2}.Q_0.X_{in} + Q_2.\overline{Q_1}.\overline{Q_0}$$

$$D_2 = \overline{Q_2}.Q_1.\overline{Q_0}.X_{in}$$

$$D_1 = \overline{Q_2}.Q_0.\overline{X_{in}} + Q_2.\overline{Q_1}.\overline{Q_0}.\overline{X_{in}}$$

$$Y_{out} = Q_2.\overline{Q_1}.\overline{Q_0}$$

<u>Homework:</u> draw the complete diagram...

State Encoding/Assignment Guidelines/Rules

- The total number of states in a machine with *n* flip-flops is 2^n, so the number of flip-flops needed to code *s* states is $\lceil \log_2 s \rceil$, the smallest integer greater than or equal to $\log_2 s$.
- The simplest assignment of *s* coded states to 2^n possible states is to use the first *s* binary integers in binary counting order. This is a good choice in some circumstances.
- However, this simplest state assignment does not always lead to the simplest excitation equations, output equations and resulting logic circuit.
- So, how do we choose the best state assignment for a given problem? In general, the only formal way to find the best assignment is to try all assignments.

State Encoding/Assignment Guidelines/Rules

- However, several practical guidelines for making reasonable state assignments include:
  - Choose a coded state into which can easily be forced at the initialization (often 00…00, or 11…11), typically by asserting a dedicated "reset" input for one or more clock ticks.
  - Minimize the number of states variables that change on each transition
  - Maximize the number of state variables that don't change in a group of related states (i.e. a group in which most transitions stay in group).
  - If there are unused states (i.e., if s< 2^n, where n= $\lceil \log_2 s \rceil$, then choose the "best" of the available state-variable combinations to achieve the foregoing goals.

(subset of the rules provided in the bibliography)

State Encoding/Assignment

- In addition to the binary assignment and Gray assignment seen in the previous example 1, there are other known types of assignment (see bibliography). For example,

- **One-Hot Assignment**
  - It may use a lot of more than the minimum number of sate variables, since it uses one bit per state, but state decode is trivial!
  - It has the advantage of usually leading to small excitation equations, since each flip-flop must be set up to 1 for transitions into only one state.

One-hot State Encoding	
S	**Q4 Q3 Q2 Q1 Q0**
ST_INIT	00001
ST_1	00010
ST_10	00100
ST_100	01000
ST_1001	10000

Homework: draw the logic diagram for the "1001" sequence detector based on one-hot state encoding.

Unused State Encodings

- Now let´s consider the disposition of unused states when the number of states available with *n* flip-flops, 2^n, exceeds the number of states required, *s*.

- There are 2 reasonable approaches, depending on the design requirements:
  - Minimal Risk
  - Minimal cost

Unused State Encodings Minimal Risk

- This approach assumes that it is possible for the sates machine somehow to get into one of the unused (or “illegal”) states, perhaps because of a hardware failure, an unexpected input, or a design error.
- Therefore, all the unused state-variable combinations are identified, and explicit next state entries are made so that, for any input combination, the unused sates go to the “initial” state, the “idle” state, and explicitly named “error” state, or some other “safe” state. This is an automatic consequence of some design methodologies if the “safe” sate is coded 00..00.

This is the approach used implicitly in the example 2

Current State	Xin		Yout
	0	1	
Q2 Q1 Q0	D2 D1 D0		
000	000	001	0
001	011	001	0
011	010	001	0
010	000	100	0
100	011	001	1
101	000	000	0
110	000	000	0
111	000	000	0

Unused State Encodings
Minimal Cost

- This approach assumes that the machine will never enter an unused state. Therefore, in the transition and excitation tables, the next state entries of the unused states can be marked as "don't-cares." In most cases this simplifies the excitation logic. However, the machine's behavior if it ever does enter an unused state may be pretty weird.

Current State	Xin		Yout
	0	1	
Q2 Q1 Q0	D2 D1 D0		
000	000	001	0
001	011	001	0
011	010	001	0
010	000	100	0
100	011	001	1
101	XXX	XXX	X
110	XXX	XXX	X
111	XXX	XXX	X

Dn / Yout		Q0			
		00	01	11	10
Q2	00				
	01				
	11	X	X	X	X
	10			X	X

Q1

Xin

Homework: determine the minimized equations of the previous example, assuming this approach (don't cares):

$$D_0 = ?$$

$$D_1 = ?$$

$$D_2 = ?$$

$$Y_{out} = ?$$

Conclusion

- At the end of this lecture and corresponding lab, it is fundamental to know how to design sequential circuits described by finite state machines and implemented with D type flip-flops, from state diagrams to hardware, including simulation and timing aspects.

- Plan for the next lectures
  - Standard sequential circuits
    - Registers and shift registers
    - Counters

Reading chapter 7 (4th ed.) or chapter 9 (5th ed.) of *John F. Wakerly, "Digital Design – Principles and Practices", Pearson – Prentice Hall*, is highly recommended.